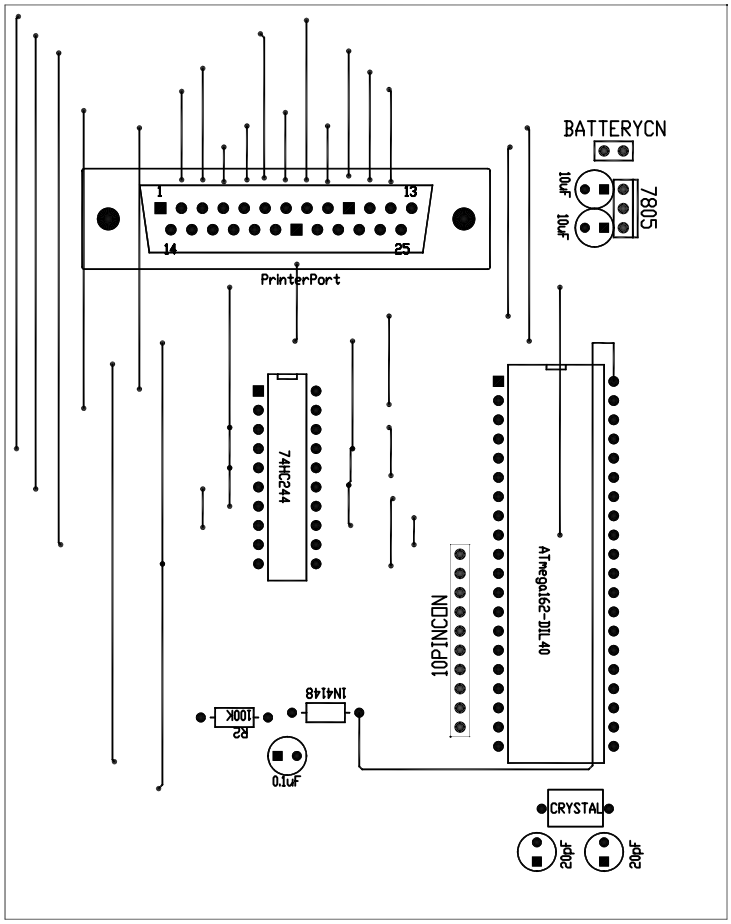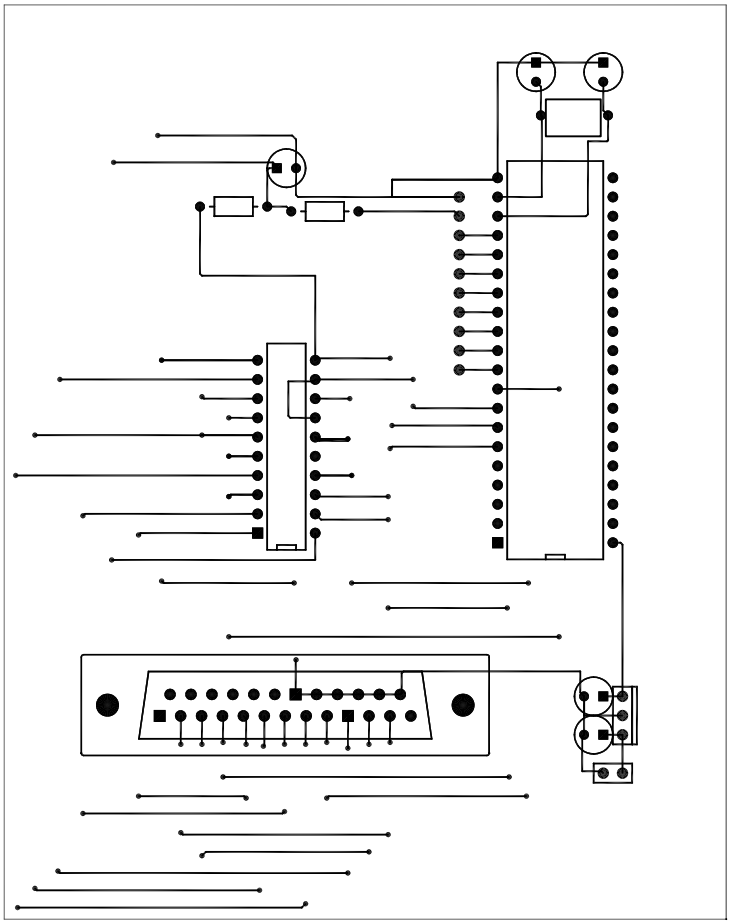
1
13
14
25
PrinterPort
74HC244
10PINCON
ATmega162-DIL40
1N4148
R2
100K
0.1uF
BATTERYCN
10uF
10uF
7805
CRYSTAL
20pF
20pF